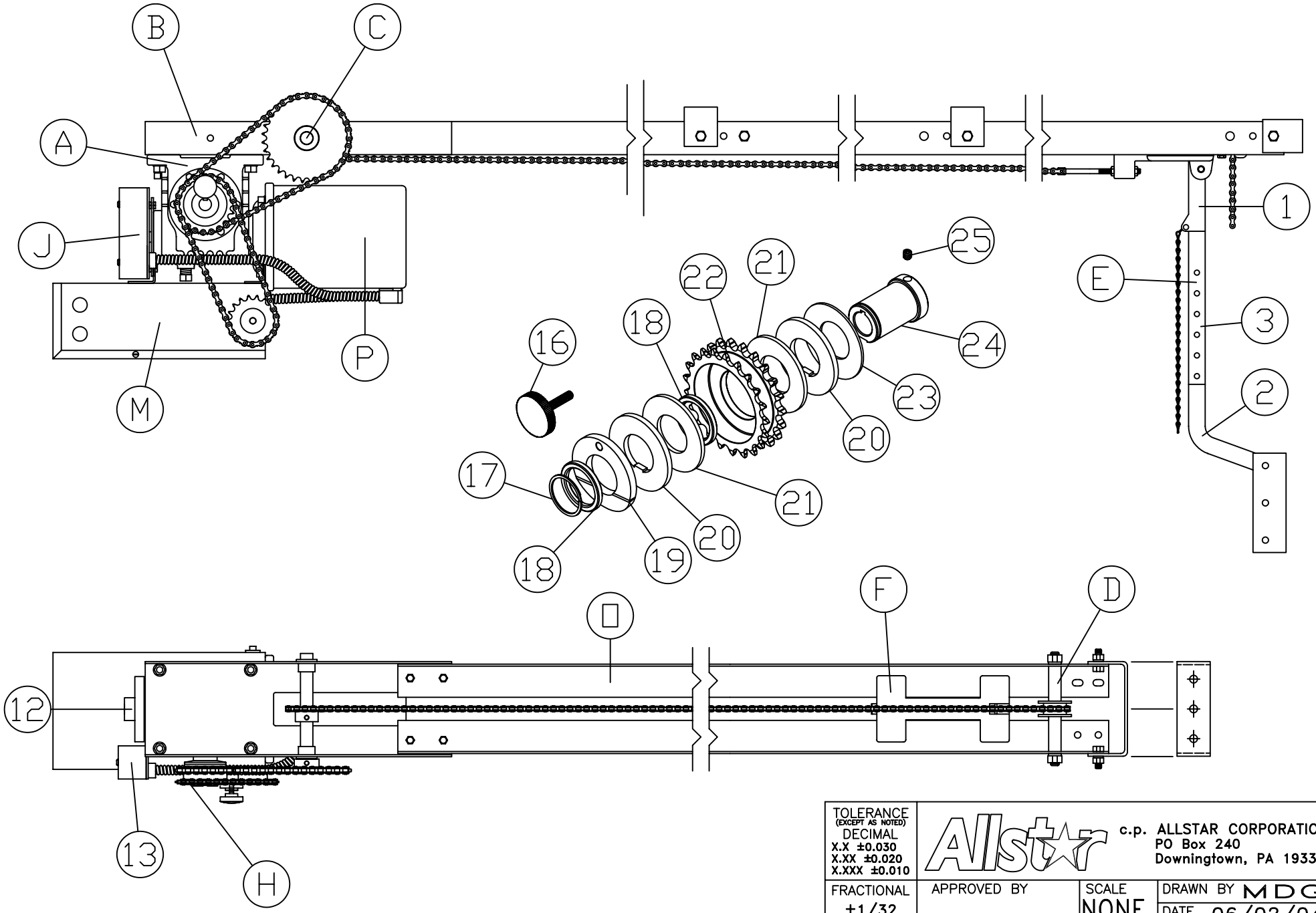

TOLERANCE (EXCEPT AS NOTED) DECIMAL X.X ±0.030 X.XX ±0.020 X.XXX ±0.010	Allstar	c.p. ALLSTAR CORPORATION PO Box 240 Downingtown, PA 19335	
FRACTIONAL ±1/32	APPROVED BY	SCALE NONE	DRAWN BY MDG DATE 06/02/04
ANGULAR ±1°	MATERIAL		SHT 1 OF 1 © 2004
TITLE Parts ID, GT			DWG NO. 112103 REV A